CSE 165: 3D User Interaction

Lecture #5: HMDs

Instructor:
Jurgen Schulze, Ph.D.

Announcements

- Homework Assignment #2
  - Due Friday, January 23rd at 1:00pm

Head Mounted Displays

- Have CRT or LCD screens with special optics in front of the eyes
- Display occludes real world
- Provide a stereoscopic view that is updated with the user's head motion

HMDs – Advantages

- Provide an immersive experience by blocking out the real world
- Easy to set up
- Do not restrict user from moving around in the real world
- Relatively inexpensive
- Can achieve good stereo quality

HMDs – Disadvantages

- Poor resolution and field of view (FOV)
- Do not take advantage of peripheral vision
- Isolation and risks related to not seeing the real world (e.g., stumbling)
- Can be heavy and uncomfortable, cumbersome to put on

HMDs – Interface Design

- Physical objects require a graphical representation
- Limits the types of input devices that can be used

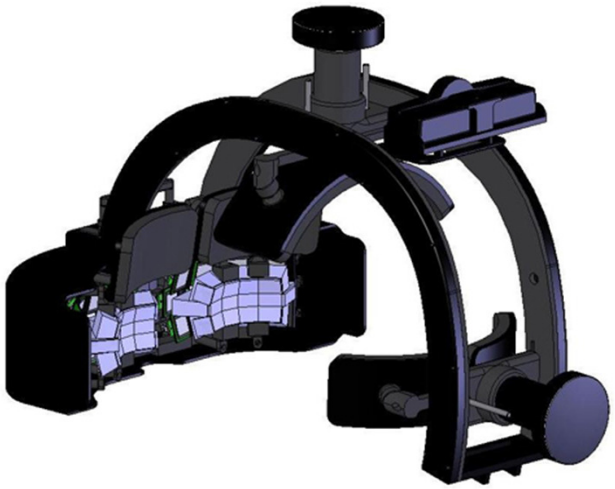

HMDs in the Early 90s

- Heavy
- Low resolution
- Small field of view
- Simple graphics
- Large computers
- Finicky gloves for user interaction

Facebook Buys Oculus Rift For $2 Billion

Luke Plunkett
Filed to: OCULUS RIFT 3/25/14 5:35pm

342,727 28

Facebook has just announced that it's buying Oculus Rift for $2 billion. Seriously.

1 2 3 4 5

"Mobile is the platform of today, and now we're also getting ready for the platforms of tomorrow," Facebook founder and CEO Mark Zuckerberg says. "Oculus has the chance to create the most social platform ever, and change the way we work, play and communicate."

March 25, 2014

Why Now?

- Cell phone tech has matured
  - High resolution screens (~3k in Galaxy Note 4)
  - Fast gyroscopes
  - Accelerometers
- Games use real 3D coordinate spaces
- Graphics cards support 3D for 3DTVs
- Real-time rendering quality close to photo-realistic

Oculus Rift DK1

- 1280x800 pixels
- Fast gyroscope
- Released March 2013
- Orientation tracking o
- Connects to PC via HI

Oculus Rift DK2

- HD screen: 1920x1080
- 60 Hz
- Fast gyroscope
- Camera for location tracking
- Field of view: 90 degrees

Crescent Bay

- Born as a Kickstarter project
- >90 degrees horizontal field of view
- 110 degrees diagonal field of view
- ½ HD per eye
- 7" display
- 1000 Hz head tracking with custom gyroscope

Oculus Rift Inventions

- Time Warp
- Positional tracking
- >60Hz tracking (w/ Crescent Bay?)

Oculus Rift with Leap

Google Cardboard

- Uses existing Android phone
- Free Android app from Google with demos

Sony Project Morpheus

- Will be sold as part of Play Station
- Sony recently announced that priority is Play Station
- 1920x1080 pixels
- OLED
- Field of view: 100 degrees

Gear VR

- Requires Galaxy Note 4
- Field of view: 96 degrees
- Accelerometer, Gyroscope, Compass
- Low photon latency <20ms
- 60 Hz
- AMOLED display
- Resolution: 2560x1440

Carl Zeiss VR One

- For Galaxy S5 or Iphone 6

Issues Today

- HMDs are closed, no see through
- AR coming but not as mature as VR HMDs
- Need to become wireless
- Input device dilemma: best if integrated into HMD
- Drivers: Windows only, no Linux

Trends

- Better Unity support
- Active developer community
- Unreal engine supports VR
- Gaming needs to be driver
- 3D cameras on the horizon for content creation (Samsung Project Beyond, etc.)

Google Glass

- Small display in front of one eye
- Not designed for VR
- Project ends in Jan 2015
- Explorer Edition available for selected users ($1,500)
- Built-in Android 4
- 640x360 pixels
- Built-in 5 MP camera
- Wi-Fi, Bluetooth
- 16GB RAM
- Gyroscope, accelerometer, compass, light sensor

Augmented Reality

- One of the best:
  - Osterhout Design Group R-7
- Qualcomm Snapdragon 805, 2.7 GHz
- Two 720p LCoS displays, 100 Hz
- See-through display
- 5MP camera on the front
- 1400 mAh battery

Auto-Stereoscopic Displays

- Lenticular
- Volumetric
- Holographic

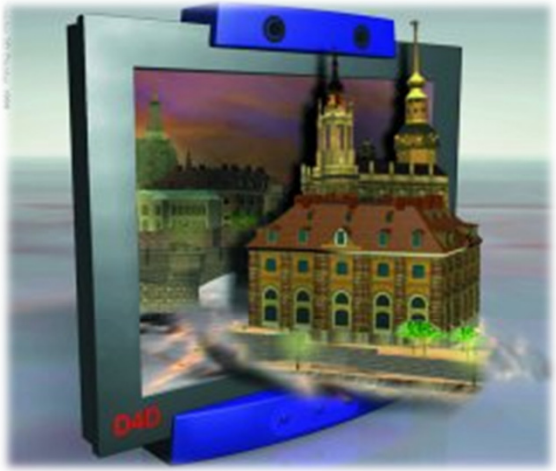

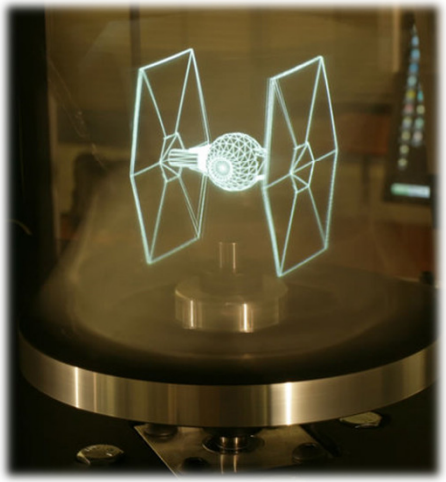

Simulated Autostereo – pCubee

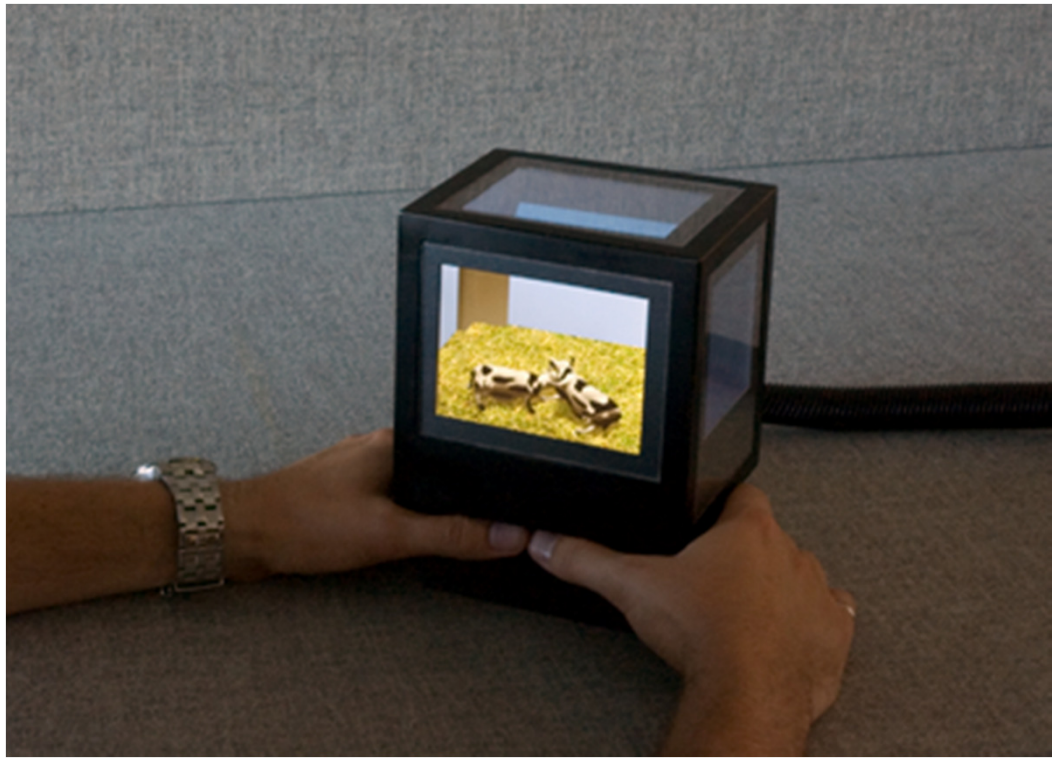

University of British Columbia

Portable Pico Projectors

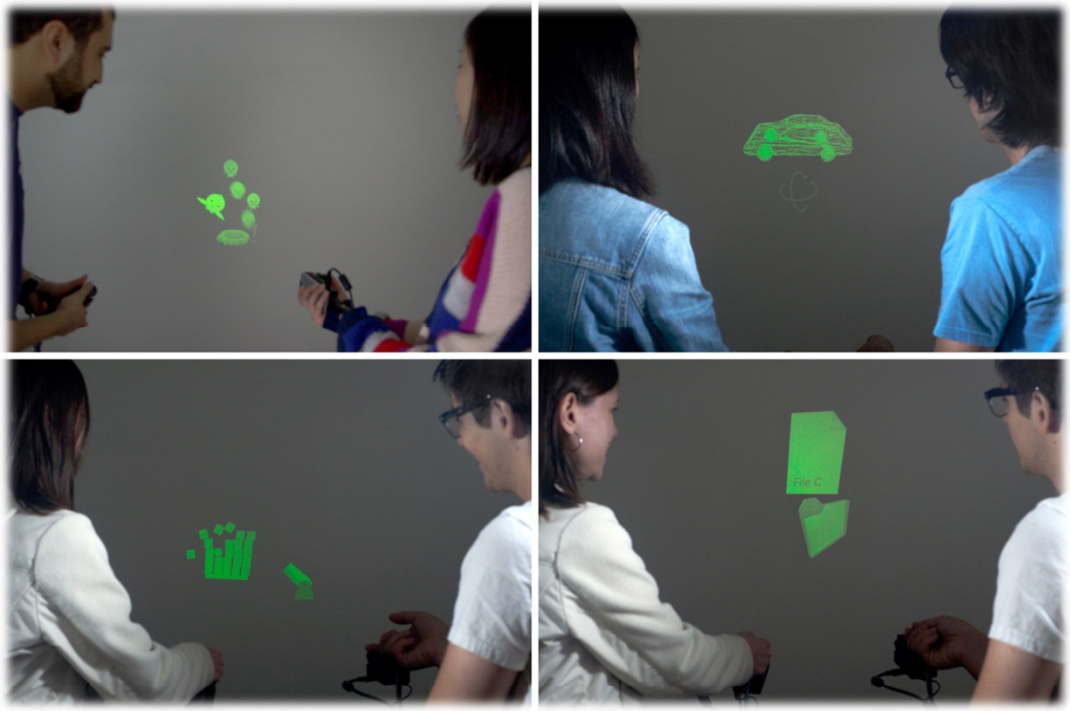

SidebySide/Motion Beam (Disney Research)

Which Visual Display to Use?

- Consider lists of pros and cons
- Consider depth cues supported
- Consider level of visual immersion
- This is a very hard question to answer empirically